## Compax3 Fluid Installation Manual

# Hydraulics Controller

**Paper version**

**C3Manager-Compax3F**
**Unterlagen / Software**
**user guides / tools**
**manuels / tools:**

- **Compax3 - DVD (english, deutsch, français)**
  **+**
- **Compax3F Installations-Handbuch deutsch**
- **Compax3F Installation Manual english**

**Release R09-10**

Windows NT®, Windows 2000™, Windows XP™, Windows Vista are trademarks of Microsoft Corporation.

## nonwarranty clause

We checked the contents of this publication for compliance with the associated hard and software. We can, however, not exclude discrepancies and do therefore not accept any liability for the exact compliance. The information in this publication is regularly checked, necessary corrections will be part of the subsequent publications.

**Worldwide sales**
**http://divapps.parker.com/divapps/eme/EME/Contact_sites/Sales%20Channel_Parker-EME.pdf**

## Production site:

ISO 9001:2008
DNV
Certified Company

Parker Hannifin GmbH
Electromechanical Automation Europe [EME]
Robert-Bosch-Strasse 22
77656 Offenburg (Germany)
Tel.: + 49 (0781) 509-0
Fax: + 49 (0781) 509-98176
Internet: **www.parker-eme.com http://www.parker-eme.com**
E-mail: **sales.automation@parker.com mailto:sales.automation@parker.com**

Parker Hannifin GmbH - registered office: Bielefeld HRB 35489
Geschäftsführung: Dr. Gerd Scheffel, Günter Schrank, Christian Stein, Kees Veraart - Aufsichtsratsvorsitzender: Hansgeorg Greuner

## Headquarters:

**England:** Parker Hannifin PLC • Electromechanical Automation • Arena Business Centre
Holy Rood Close • Poole, Dorset BH17 7FJ UK
Tel.: +44 (0)1202 606300 • Fax: +44 (0)1202 606301
E-mail: **sales.automation@parker.com mailto:sales.automation@parker.com** •
Internet: **www.parker-eme.com http://www.parker-eme.com**

**Italy:** Parker Hannifin S.p.A • SSD SBC • Electromechanical Automation • Via Gounod, 1
I-20092 Cinisello Balsamo (MI), Italy
Tel.: +39 (0)2 66012459 • Fax: +39 (0)2 66012808
E-mail: **sales.automation@parker.com mailto:sales.sbc@parker.com** •
Internet: **www.parker-eme.com http://www.parker-eme.com**

**USA:** Parker Hannifin Corporation • Electromechanical Automation
5500 Business Park Drive • Rohnert Park, CA 94928
Phone #: (800) 358-9068 • FAX #: (707) 584-3715
E-mail: **CMR_help@parker.com mailto:emn_support@parker.com** • Internet:
**www.compumotor.com http://www.compumotor.com**

# 1. Notes on the Documents Supplied

**Compax3 - Installation manual**

The present manual contains the installation instructions for the associated Compax3 device series.

**This installation manual does contain only the basic information; for more detailed information please refer to the Help-files of the individual Compax3 device types.**

## Compax3 - DVD

**C3 ServoManager**

The enclosed self-starting* DVD contains the “C3 ServoManager” software tool for configuring, optimizing etc. Compax3.

Please use always the latest C3 ServoManager version,

**Parker Integrated Engineering Tool**

Furthermore, the "Parker Integrated Engineering Tool", a software tool for the project management of several Parker Motion Control products, can be found on the C3 DVD.

Several axes are managed in a common project. The Compax3 ServoManager is integrated per "Plug & Play" for each Compax3 axis. The configuration, optimization,.. take place in the same way as in an independently working C3 ServoManager.

**The "C3 ServoManager" software tool is also functioning independently from the Parker Integrated Engineering Tool!**

**Online help system**

After the installation of the ServoManager you can copy the desired Online help system with the "C3 ServoManager Help Installer" (you can select the C3 device type as well as the desired language) to your PC. The help system can be called up directly from the ServoManager. You will find the complete description of the selected device type in these online help files.

Please note that the help files are associated with defined device and software versions.

**Catalogs**

The catalogs supplied provide an overview of and information on the Compax3 device series.

**Adobe Acrobat Reader®**

For reading PDF files you need the "Adobe Acrobat Reader", a software tool which is available free of charge. It is distributed and generally accepted throughout the world. You can also download it directly from the Adobe website.

* If your PC has not been set up accordingly, start the "start.htm" file on the CD.

# 1.1 C3 ServoManager

**Installation of the C3 ServoManager**

**The Compax3 ServoManager can be installed directly from the Compax3 DVD. Click on the corresponding hyperlink resp. start the installation program "C3Mgr_Setup_V.....exe" and follow the instructions.**

## PC requirements

**Recommendation:**

| | |
|---|---|
| Operating system: | MS Windows XP SP2 / MS Windows 2000 as from SP4 / (MS Vista) |
| Browser: | MS Internet Explorer 6.x |
| Processor: | Intel Pentium 4 / Intel Core 2 Duo / AMD Athlon class as from >=2GHz |
| RAM memory: | >= 1024MB |
| Hard disk: | >= 20GB available memory |
| Drive: | DVD drive |
| Monitor: | Resolution 1024x768 or higher |
| Graphics card: | on onboard graphics (for performance reasons) |
| Interface: | USB |

**Minimum requirements:**

| | |
|---|---|
| Operating system: | MS Windows XP SP2 / MS Windows 2000 as from SP4 |
| Browser: | MS Internet Explorer 6.x |
| Processor: | >=1.5GHz |
| RAM memory: | 512MB |
| Hard disk: | 10GB available memory |
| Drive: | DVD drive |
| Monitor: | Resolution 1024x768 or higher |
| Graphics card: | on onboard graphics (for performance reasons) |
| Interface: | USB |

**Note:**

- For the installation of the software you need administrator authorization on the target computer.
- Several applications running in parallel, reduce the performance and operability.
- Especially customer applications, exchanging standard system components (drivers) in order to improve their own performance, may have a strong influence on the communication performance or even render normal use impossible.
- Operation under virtual machines such as Vware Workstation 6/ MS Virtual PC is not possible.
- Onboard graphics card solutions reduce the system performance by up to 20% and cannot be recommended.
- Operation with notebooks in current-saving mode may lead, in individual cases, to communication problems.

**Connection between PC and Compax3**

Your PC is connected with Compax3 via a RS232 cable (SSK1).

Cable SSK1 (COM 1/2-interface on the PC to X10 on the Compax3 or via adapter SSK32/20 on programming interface of Compax3H).

Start the Compax3 ServoManager and make the setting for the selected interface in the "**Options Communication settings RS232/RS485...**" menu.

**Device Selection**

In the menu tree under device selection you can read the device type of the connected device (Online Device Identification) or select a device type (Device Selection Wizard).

**Configuration**

Then you can double click on "Configuration" to start the configuration wizard. The wizard will lead you through all input windows of the configuration.

# Inhalt

1. Notes on the Documents Supplied .....3
1.1 C3 ServoManager ..... 4
2. Introduction .....6
2.1 Device assignment Compax3 Fluid ..... 6
2.2 Scope of delivery ..... 6
2.3 Type specification plate Compax3 Fluid ..... 7
2.4 Packaging, transport, storage ..... 8
2.5 Safety instructions ..... 9
2.5.1. General hazards ..... 9
2.5.2. Safety-conscious working ..... 9
2.5.3. Special safety instructions ..... 9
2.6 Warranty conditions ..... 10
2.7 Conditions of utilization for CE-conform operation ..... 11
2.8 EC declaration of conformity Compax3F ..... 12
3. Compax3F device description .....13
3.1 State of delivery ..... 13
3.2 Plug and connector assignment Compax3 Fluid ..... 13
3.2.1. Meaning of the front panel LEDs (via X10) ..... 13
3.2.2. Plug and connector assignment ..... 14
3.2.3. Plug and connector assignment complete ..... 15
3.2.4. Analog Input (plug X1) ..... 16
3.2.5. Analog Output (plug X2) ..... 17
3.2.6. Voltage supply (plug X3) ..... 18
3.2.7. RS232/RS485 interface (plug X10) ..... 19
3.2.8. Analog / Encoder (plug X11) ..... 20
3.2.9. Digital inputs/outputs (plug X12) ..... 21
3.2.10. Feedback (connector X13) ..... 22
3.2.11. Mounting and dimensions ..... 23
4. Technical Characteristics .....24
5. Index .....26

# 2. Introduction

**In diesem Kapitel finden Sie**

Device assignment Compax3 Fluid ....6
Scope of delivery ....6
Type specification plate Compax3 Fluid ....7
Packaging, transport, storage ....8
Safety instructions ....9
Warranty conditions ....10
Conditions of utilization for CE-conform operation ....11
EC declaration of conformity Compax3F ....12

## 2.1 Device assignment Compax3 Fluid

**This manual is valid for the following devices:**

- C3F001D2 F12 + supplement

## 2.2 Scope of delivery

**The following items are furnished with the device:**

- Manuals*
  - Installation manual (German, English, French)
  - Compax3 DVD
  - Startup Guide (German / English)

*Comprehensiveness of documentation depends on device type

- Device accessories
  Device accessories for Compax3F
  - A shield connecting terminal for the large area shield connection of the sensor and valve cable (X1, X2), as well as
  - the mating plug connectors for the Compax3 plug connectors X1, X2, X3, and
  - fixing material for the mounting of a supporting rail

# 2.3 Type specification plate Compax3 Fluid

**You will find the exact description of the device on the type specification plate, which is located on the right side of the device:**

**Type specification plate Compax3 Fluid:**

**Explanation:**

| | | |
|---|---|---|
| 1 | Type designation | The complete order designation of the device (2, 6 - 9...) (category no.) |
| 2 | C3F001D2 | **C3:** Abbreviation for Compax3<br>**F =Fluid:** Hydraulics Controller<br>**001:** +/-10V and 0..20mA outputs (16 Bit)<br>**D2:** 24VDC device |
| 3 | Unique number of the particular device | |
| 4 | Supply voltage | 24 VDC |
| 5 | Date of factory test | |
| 6 | Designation of the feedback system | **F12:**Feedback Module |
| 7 | Device interface | **I11 / I12:**Digital Inputs / Outputs and RS232 / RS485<br>**I20:**Profibus DP / **I21:**CANopen / **I22:**DeviceNet /<br>**I30:**Ethernet Powerlink / **I31:** EtherCAT / **I32:** Profinet |
| 8 | Technology function | **T11:**Positioning / pressure/force control<br>**T30:**Motion control programmable according to IEC61131-3<br>**T40:**Electronic cam |
| 9 | Options | **Mxx:** |
| 10 | CE compliance | |
| 11 | UL certification | **PD2** (see on page 25)<br>(degree of pollution) |

# 2.4 Packaging, transport, storage

### Packaging material and transport

**Caution!**

The packaging material is inflammable, if it is disposed of improperly by burning, lethal fumes may develop.

The packaging material must be kept and reused in the case of a return shipment. Improper or faulty packaging may lead to transport damages.

Make sure to transport the drive always in a safe manner and with the aid of suitable lifting equipment (**Weight** (see on page 24)). Do never use the electric connections for lifting. Before the transport, a clean, level surface should be prepared to place the device on. The electric connections may not be damaged when placing the device.

### First device checkup

- Check the device for signs of transport damages.
- Please verify, if the indications on the Type identification plate correspond to your requirements.
- Check if the consignment is complete.

### Disposal

This product contains materials that fall under the special disposal regulation from 1996, which corresponds to the EC directory 91/689/EEC for dangerous disposal material. We recommend to dispose of the respective materials in accordance with the respectively valid environmental laws. The following table states the materials suitable for recycling and the materials which have to be disposed of separately.

| Material Option | suitable for recycling | Disposal |
|---|---|---|
| Metal | yes | no |
| Plastic materials | yes | no |
| Circuit boards | no | yes |

Please dispose of the circuit boards according to one of the following methods:

- Burning at high temperatures (at least 1200°C) in an incineration plant licensed in accordance with part A or B of the environmental protection act.
- Disposal via a technical waste dump which is allowed to take on electrolytic aluminum condensers. Do under no circumstances dump the circuit boards at a place near a normal waste dump.

### Storage

If you do not wish to mount and install the device immediately, make sure to store it in a dry and clean environment. Make sure that the device is not stored near strong heat sources and that no metal chippings can get into the device.

# 2.5 Safety instructions

**In diesem Kapitel finden Sie**

General hazards ....9
Safety-conscious working ....9
Special safety instructions ....9

## 2.5.1. General hazards

General Hazards on Non-Compliance with the Safety Instructions

The device described in this manual is designed in accordance with the latest technology and is safe in operation. Nevertheless, the device can entail certain hazards if used improperly or for purposes other than those explicitly intended.

Electronic, moving and rotating components can

- constitute a hazard for body and life of the user, and
- cause material damage

### Usage in accordance with intended purpose

The device is designed for operation in electric power drive systems (VDE0160). Motion sequences can be automated with this device. Several motion sequences can be combined by interconnecting several of these devices. Mutual interlocking functions must be incorporated for this purpose.

## 2.5.2. Safety-conscious working

This device may be operated only by qualified personnel.

Qualified personnel in the sense of these operating instructions consists of:

- Persons who, by virtue to their training, experience and instruction, and their knowledge of pertinent norms, specifications, accident prevention regulations and operational relationships, have been authorized by the officer responsible for the safety of the system to perform the required task and in the process are capable of recognizing potential hazards and avoiding them (definition of technical personnel according to VDE105 or IEC364),
- Persons who have a knowledge of first-aid techniques and the local emergency rescue services.
- persons who have read and will observe the safety instructions.
- Those who have read and observe the manual or help (or the sections pertinent to the work to be carried out).

This applies to all work relating to setting up, commissioning, configuring, programming, modifying the conditions of utilization and operating modes, and to maintenance work.

This manual and the help information must be available close to the device during the performance of all tasks.

## 2.5.3. Special safety instructions

- Check the correct association of the device and its documentation.
- Never detach electrical connections while voltage is applied to them.
- Safety devices must be provided to prevent human contact with moving or rotating parts.
- Make sure that the device is operated only when it is in perfect condition.
- Implement and activate the stipulated safety functions and devices.
- Operate the device only with the housing closed.
- Make sure that all devices are sufficiently fixed.

## 2.6 Warranty conditions

- The device must not be opened.
- Do not make any modifications to the device, except for those described in the manual.
- Make connections to the inputs, outputs and interfaces only in the manner described in the manual.
- Fix the devices according to the **mounting instructions** (see on page 23). We cannot provide any guarantee for other mounting methods.

**Note on exchange of options**

Device options must be exchanged in the factory to ensure hardware and software compatibility.

# 2.7 Conditions of utilization for CE-conform operation

### - Industry and trade -

The EC guidelines for electromagnetic compatibility 2004/108/EC and for electrical operating devices for utilization within certain voltage limits 2006/95/EC are fulfilled when the following boundary conditions are observed:

**Operation of the devices only in the condition in which they were delivered, i.e. with all housing panels.**

### Shielding connection of the valve cables

The cable must be fully-screened and connected to the Compax3 housing. Use the cable clamps/shield connecting terminals furnished with the device.

The shield of the valve cable must also be connected with the valve housing. The fixing (via plug or screw in the terminal box) depends on the valve type.

**Compax3 encoder cable:** < 100 m

**Control:** Use only with aligned controller (to avoid control loop oscillation).

**Cable installation:**

- Signal lines and power lines should be installed as far apart as possible.
- Signal lines should never pass close to excessive sources of interference (motors, transformers, contactors etc.).
- Do not place mains filter output cable parallel to the load cable.

**Accessories:** Make sure to use only the accessories recommended by Parker

**Connect all cable shields at both ends, ensuring large contact areas!**

**Warning:**

**This is a product in the restricted sales distribution class according to EN 61000-6-4. In a domestic area this product can cause radio frequency disturbance, in which case the user may be required to implement appropriate remedial measures.**

# 2.8 EC declaration of conformity Compax3F

Parker Hannifin GmbH

Robert-Bosch-Straße 22
D-77656 Offenburg

Tel.: +49 (0) 781-509-0
Fax.: +49 (0) 781-509-98

www.parker-eme.com

## CE KONFORMITÄTSERKLÄRUNG
## *CE DECLARATION OF CONFORMITY*

| | |
|---|---|
| Dokumenten Nr.<br>*Declaration N.* | **DoC006-R 1.0** |
| Firma<br>*Manufacturer* | **Parker Hannifin GmbH** |
| Anschrift<br>*Address* | **Robert-Bosch-Straße 22**<br>**77656 Offenburg**<br>**Deutschland** |
| Produkt<br>*Product* | **Hydraulik-Regler**<br>***Fluid controller*** |
| Produktname<br>*Product name* | **Compax3 Serie – C3F**<br>***Compax3 series – C3F*** |

Die Konformität der Produkte wird vermutet, durch die Einhaltung folgender Normen:
*The above products are in accordance with the relevant clauses from following standards:*

| Norm / *Standard* | Titel / *Title* | Ausgabe / *Edition* |
|---|---|---|
| DIN EN 61000-6-2 | Elektromagnetische Verträglichkeit (EMV)<br>Teil 6-2: Fachgrundnormen – Störfestigkeit für Industriebereiche<br>*Electromagnetic compatibility (EMC)*<br>*Part 6-2: Generic standards – Immunity for industrial environments* | 2006-3 |
| DIN EN 61000-6-4 | Elektromagnetische Verträglichkeit (EMV)<br>Teil 6-4: Fachgrundnormen - Störaussendung für Industriebereiche<br>*Electromagnetic compatibility (EMC)*<br>*Part 6-4: Generic standards - Emission standard for industrial environments* | 2007-9 |

**Bemerkungen/*Notes*:**
Den im Produkthandbuch beschriebenen Sicherheits-, Installations- und Bedienungshinweisen muss Folge geleistet werden.
*These products must be installed and operated with reference to the instructions in the Product Manual.*
*All instructions, warnings and safety information of the Product Manual must be adhered to.*

Die Produkte entsprechen den Anforderungen der EMV-Richtlinie 2004/108/EG.
*The products are in accordance to the EMC Directive 2004/108/EC.*

Die Produkte sind für den Einbau in eine andere Maschine bestimmt. Die Inbetriebnahme ist solange untersagt, bis die Konformität des Endproduktes gemäß der Maschinen-Richtlinie 2006/42/EG festgestellt ist.
*The products are components to be incorporated into machinery and may not be operated alone. The complete machinery or installation may only be put into service when the safety considerations of the Machinery Directive 2006/42/EC are fully adhered to.*

Offenburg, 08/10/2010

Jürgen Killius, *Operations Manager* _____

**Parker Hannifin GmbH**
Sitz: Bielefeld HRB 35489
USt.-IdNr.: DE 122 802 922
Steuernummer: 5349 5747 1543

Commerzbank Offenburg
BLZ 664 400 84
Konto-Nr. 45 0 19 12 00
BIC/Swift-Code: COBADEFF
IBAN DE95 6644 0084 0450 1912 00

**Geschäftsführung:**
Dr. Gerd Scheffel, Günter Schrank, Christian Stein, Kees Veraart
**Vorsitzender des Aufsichtsrates:** Hansgeorg Greuner

# 3. Compax3F device description

**In diesem Kapitel finden Sie**

State of delivery ..... 13
Plug and connector assignment Compax3 Fluid ..... 13

## 3.1 State of delivery

Compax3 is delivered without configuration!

After switching on the 24VDC supply, the red LED is flashing while the green LED is dark.

Please configure the device with the help of the Windows-Software "Compax3 ServoManager"!

## 3.2 Plug and connector assignment Compax3 Fluid

**In diesem Kapitel finden Sie**

Meaning of the front panel LEDs (via X10) ..... 13
Plug and connector assignment ..... 14
Plug and connector assignment complete ..... 15
Analog Input (plug X1) ..... 16
Analog Output (plug X2) ..... 17
Voltage supply (plug X3) ..... 18
RS232/RS485 interface (plug X10) ..... 19
Analog / Encoder (plug X11) ..... 20
Digital inputs/outputs (plug X12) ..... 21
Feedback (connector X13) ..... 22
Mounting and dimensions ..... 23

### 3.2.1. Meaning of the front panel LEDs (via X10)

| Status | LED red | LED green |
|---|---|---|
| Voltages missing. | off | off |
| While booting. | alternately flashing | |
| No configuration present.<br><br>Compax3 IEC61131-3 program not compatible with Compax3 Firmware.<br><br>no Compax3 IEC61131-3 program. | flashing | off |
| Axis(es) blocked. | off | flashes slowly |
| Axis(es) enabled. | off | on |
| Axis in fault status / fault present. | on | off |

## 3.2.2. Plug and connector assignment

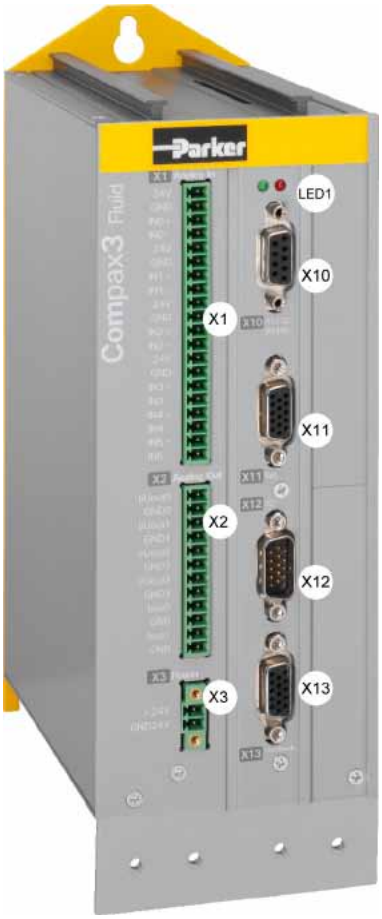


| | |
|---|---|
| **X1** | Analog Inputs |
| **X2** | Analog Outputs |
| **X3** | 24 VDC power supply |
| | |
| **X10** | RS232/RS485 |
| **X11** | 2. Feedback Type |
| **X12** | Inputs/Outputs |
| **X13** | 1. Feedback Type |

**Caution!**

Always switch devices off before wiring them!

## 3.2.3. Plug and connector assignment complete

**In detail:** The fitting of the different plugs depends on the extension level of Compax3. In part, the assignment depends on the Compax3 option implemented.

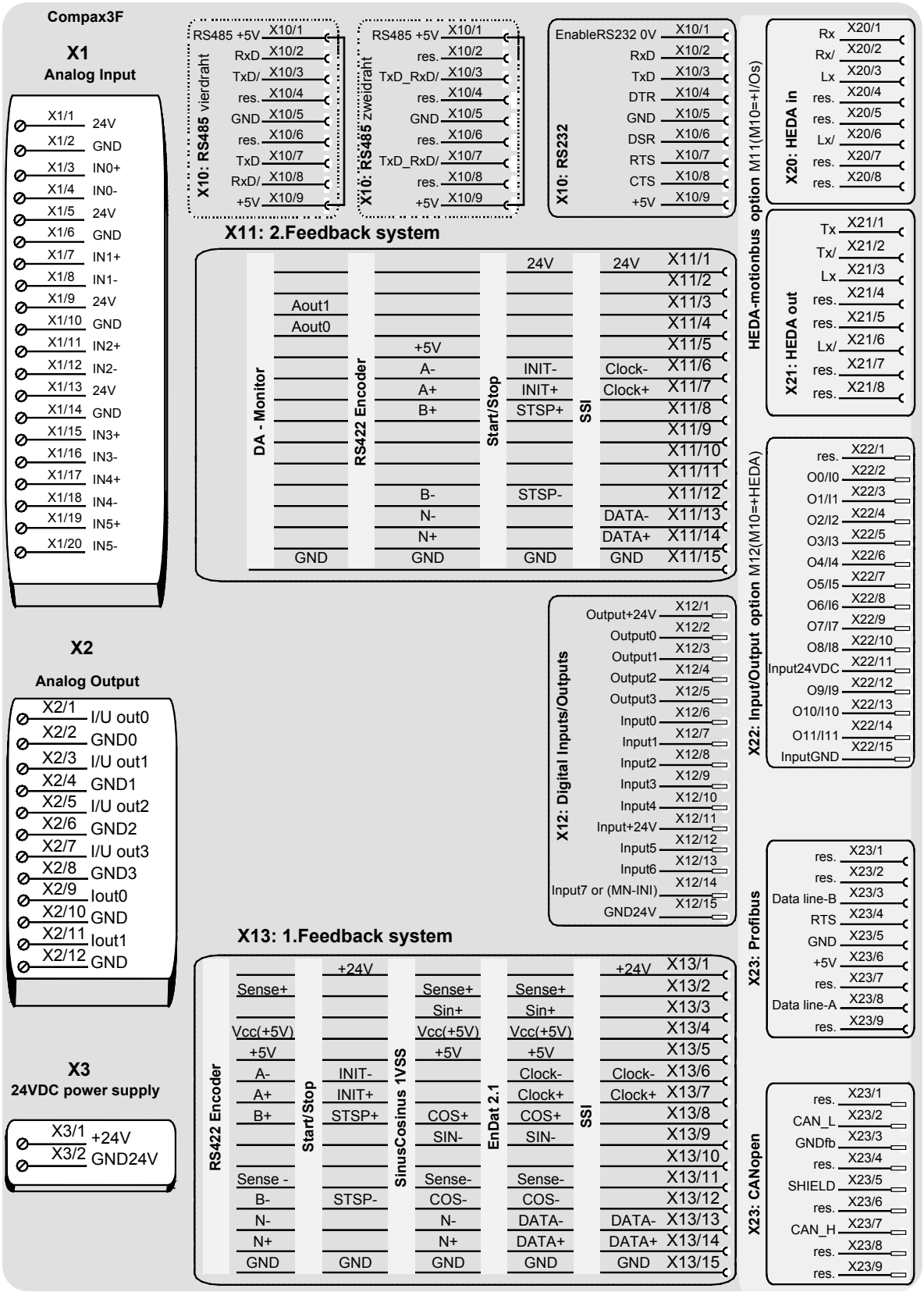

## 3.2.4. Analog Input (plug X1)

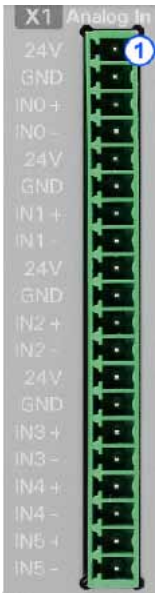


| Connector X1 Pin | Description | Combicon 3.81mm; female connector |
|---|---|---|
| 1 | 24V | Supply Sensor 0 |
| 2 | GND | Supply Sensor 0 |
| 3 | IN0+ | Signal Sensor 0 + |
| 4 | IN0- | Signal Sensor 0 - |
| 5 | 24V | Supply Sensor 1 |
| 6 | GND | Supply Sensor 1 |
| 7 | IN1 + | Signal Sensor 1 + |
| 8 | IN1 - | Signal Sensor 1 - |
| 9 | 24V | Supply Sensor 2 |
| 10 | GND | Supply Sensor 2 |
| 11 | IN2 + | Signal Sensor 2 + |
| 12 | IN2 - | Signal Sensor 2 - |
| 13 | 24V | Supply Sensor 3 |
| 14 | GND | Supply Sensor 3 |
| 15 | IN3 + | Signal Sensor 3 + |
| 16 | IN3- | Signal Sensor 3 - |
| 17 | IN4+ | +/-10V Input 4 |
| 18 | IN4- | +/-10V Input 4 |
| 19 | IN5+ | +/-10V Input 5 |
| 20 | IN5- | +/-10V Input 5 |

### Requirement: Connection cable

Use shielded cables.

### Shield connection of the cables

The cable must be fully-screened and connected to the Compax3 housing. Use the cable clamps/shield connecting terminals furnished with the device.

### 3.2.4.1 Wiring of the analog inputs

**Input IN0**

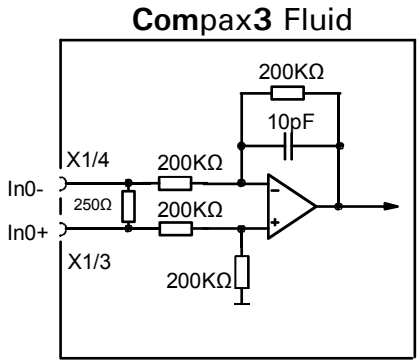


IN0 to IN3 do have the same wiring!
**Pin assignment** (see on page 16) X1

**Input IN4**

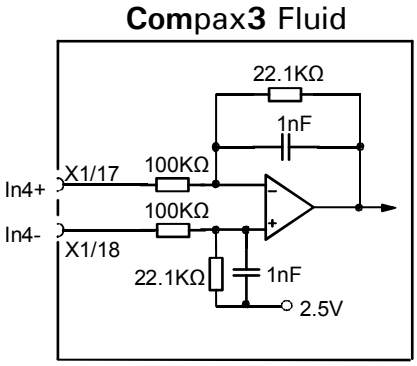


IIN4 and IN5 (X11/19 and X11/20) have the same wiring!

## 3.2.5. Analog Output (plug X2)

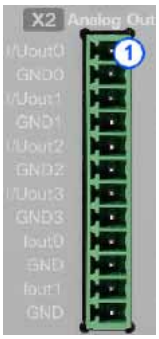


| Plug X2 Pin | Description | Combicon 3.81mm; female connector |
|---|---|---|
| 1 | I/U Aout0 | ±10V/10mA or 4..20mA |
| 2 | GND 0 | |
| 3 | I/U Aout1 | ±10V/10mA or 4..20mA |
| 4 | GND 1 | |
| 5 | I/U Aout2 | ±10V/10mA or 4..20mA |
| 6 | GND 2 | |
| 7 | I/U Aout3 | ±10V/10mA or 4..20mA |
| 8 | GND 3 | |
| 9 | Iout 0 | +/-100mA current output 0 |
| 10 | GND | |
| 11 | Iout 1 | +/-100mA current output 1 |
| 12 | GND | |

Terminating resistor:

Voltage +/-10V: ≥ 1000Ω

Current 4..20mA: ≤ 600Ω

Current 100mA: ≤ 100Ω

All outputs are short circuit proof.

### Requirement: Connection cable

Use shielded cables.

### Shield connection of the cables

The cable must be fully-screened and connected to the Compax3 housing. Use the cable clamps/shield connecting terminals furnished with the device.

### 3.2.5.1 Wiring of analog outputs

**Output I/U Aout0**

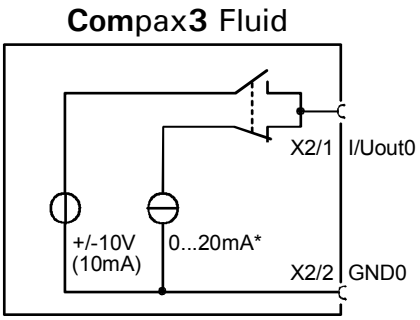


* 20mA to max. 450Ω

Aout0 to Aout3 do have the same wiring!
**Pin assignment** (see on page 17) X2

**Output Iout0**

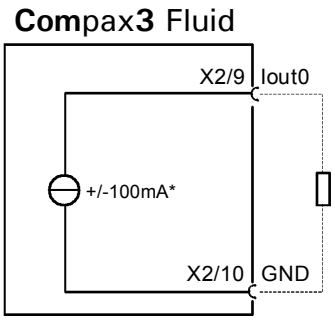


* if RL<=180Ω

Iout0 and Iout1 (X2/11 and X2/12) have the same wiring!

## 3.2.6. Voltage supply (plug X3)

| Connector X3 Pin | Description | Combicon 5mm |
|---|---|---|
| 1 | +24 V | 24 VDC (power supply) |
| 2 | GND24V | GND |

### Voltage supply 24VDC

| Controller type | Compax3 F001 D2 |
|---|---|
| Voltage range | 21 - 27VDC |
| Mains module | with switch-on current limitation, due to capacitive load |
| Fuse | MTP miniature circuit breaker or "delayed action fuse", due to capacitive load |
| Current drain of the device | 0.8A (max. 1.5A) |
| Total current drain | 0.8A + total load of the digital outputs |
| Ripple | <1Vss |
| Requirement according to safe extra low voltage (SELV) | yes |

## 3.2.7. RS232/RS485 interface (plug X10)

Interface selectable by contact functions assignment of X10/1:

X10/1=0V RS232

X10/1=5V RS485

| PIN X10 | RS232 (Sub D) |
|---|---|
| 1 | (Enable RS232) 0V |
| 2 | RxD |
| 3 | TxD |
| 4 | DTR |
| 5 | GND |
| 6 | DSR |
| 7 | RTS |
| 8 | CTS |
| 9 | +5V |

### RS485 2-wire

| PIN X10 | RS485 2-wire Sub D<br>Pin 1 and 9 externally jumpered |
|---|---|
| 1 | Enable RS485 (+5V) |
| 2 | res. |
| 3 | TxD_RxD/ |
| 4 | res. |
| 5 | GND |
| 6 | res. |
| 7 | TxD_RxD |
| 8 | res. |
| 9 | +5V |

### RS485 4-wire

| PIN X10 | RS485 4-wire Sub D<br>Pin 1 and 9 externally jumpered |
|---|---|
| 1 | Enable RS485 (+5V) |
| 2 | RxD |
| 3 | TxD/ |
| 4 | res. |
| 5 | GND |
| 6 | res. |
| 7 | TxD |
| 8 | RxD/ |
| 9 | +5V |

### USB - RS232/RS485 converter

The following USB - RS232 converters were tested:

- ATEN UC 232A
- USB GMUS-03 (available under several company names)
- USB / RS485: **Moxa Uport 1130 http://www.moxa.com/product/UPort_1130.htm**
- Ethernet/RS232/RS485: **NetCom 113 http://www.vscom.de/666.htm**

## 3.2.8. Analog / Encoder (plug X11)

The following position sensors can be connected via X11:

- RS422 Encoder (max. 5MHz, (track A or B) or step/direction)
- SSI (RS422)
- Start / Stop (Time of Flight, RS422)

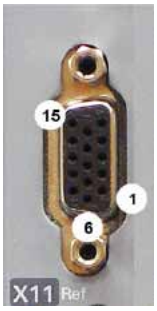


| 2. Feedback system / X11 High Density /Sub D | | | | |
|---|---|---|---|---|
| **Pin** | **DA monitor** | **RS422 Encoder** | **Start/Stop (time-of-flight)** | **SSI** |
| 1 | | | +24V max. 100mA | +24V max. 100mA |
| 2 | | | | |
| 3 | Aout1 | | | |
| 4 | Aout0 | | | |
| 5 | | +5V (for encoder) max. 150 mA | | |
| 6 | | A- | INIT- | Clock- |
| 7 | | A+ | INIT+ | Clock+ |
| 8 | | B+ | STSP+ | |
| 9 | | | | |
| 10 | | | | |
| 11 | | | | |
| 12 | | B- | STSP- | |
| 13 | | N- | | DATA- |
| 14 | | N+ | | DATA+ |
| 15 | GND | GND | GND | GND |

Max. start/stop time is 1.6ms (over 4.15m).

### 3.2.8.1 Connections of the encoder interface

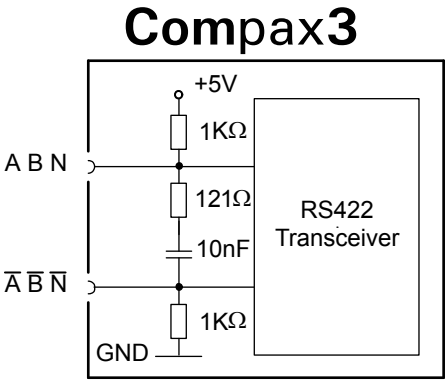


The input connection is available in triple (for A & /A, B & /B, N & /N)

## 3.2.9. Digital inputs/outputs (plug X12)

| Pin X12 | Input/output | I/O / X12<br>High density/Sub D |
|---|---|---|
| 1 | Output | +24 V DC output (max. 340mA) |
| 2 | O0 | Output 0 (max. 100 mA) |
| 3 | O1 | Output 1 (max. 100mA) |
| 4 | O2 | Output 2 (max. 100mA) |
| 5 | O3 | Output 3 (max. 100mA) |
| 6 | I0 | Input 0 |
| 7 | I1 | Input 1 |
| 8 | I2 | Input 2 |
| 9 | I3 | Input 3 |
| 10 | I4 | Input 4 |
| 11 | I | 24V input for the digital outputs Pins 2 to 5 |
| 12 | I5 | Input 5 |
| 13 | I6 | Input 6 |
| 14 | I7 | Input 7 |
| 15 | Output | GND24V |

All inputs and outputs have 24V level.

The exact assignment depends on the the device type!

You will find the description of the device-specific assignment in the online help which can be opened from the Compax3 ServoManager.

Maximum capacitive loading of the outputs: 50nF (max. 4 Compax3 inputs).

### 3.2.9.1 Connection of the digital Outputs/Inputs

**Wiring of digital outputs**

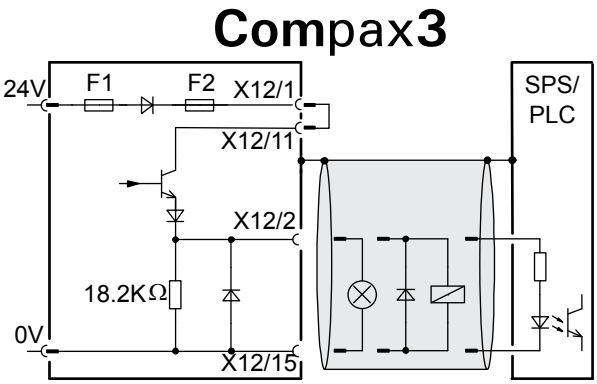


The circuit example is valid for all digital outputs!

The outputs are short circuit proof; a short circuit generates an error.

**Status of digital inputs**

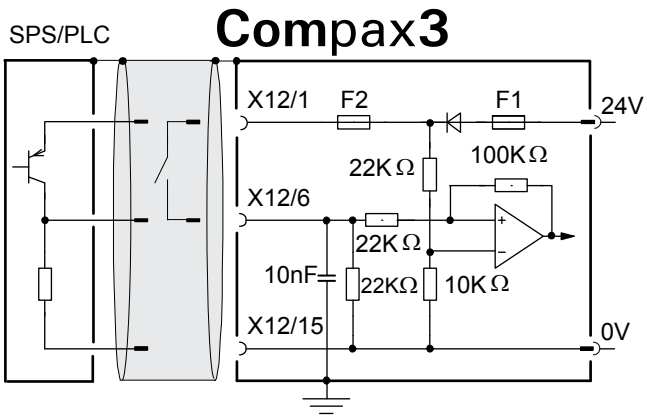


The circuit example is valid for all digital inputs!

Signal level:

- > 9.15V = "1" (38.2% of the control voltage applied)
- < 8.05V = "0" (33.5% of the control voltage applied)

F1: Delayed action fuse

F2: Quick action electronic fuse; can be reset by switching the 24 VDC supply off and on again.

## 3.2.10. Feedback (connector X13)

The following position sensors can be connected via X13:

- 1VSS SineCosine (max. 400Hz)
- RS422 Encoder (max. 5MHz, (track A or B) or step/direction)
- SSI (RS422)
- Start / Stop (Time of Flight, RS422)
- EnDat2.1

| 1. Feedback system / X13 High Density /Sub D | | | | | |
|---|---|---|---|---|---|
| **Pin** | **RS422 Encoder** | **SineCosine 1VSS** | **EnDat 2.1** | **Start/Stop (time-of-flight)** | **SSI** |
| 1 | | | | +24V max. 100mA | +24V max. 100mA |
| 2 | Sense+ | Sense+ | Sense+ | | |
| 3 | | Sin+ | Sin+ | | |
| 4 | Vcc +5V (controlled on the encoder side) | Vcc +5V (controlled on the encoder side) | Vcc +5V (controlled on the encoder side) | | |
| 5 | +5V (for encoder) max. 150mA | +5V | +5V | | |
| 6 | A- | | Clock- | INIT- | Clock- |
| 7 | A+ | | Clock+ | INIT+ | Clock+ |
| 8 | B+ | COS+ | COS+ | STSP+ | |
| 9 | | SIN- | SIN- | | |
| 10 | | | | | |
| 11 | Sense- | Sense- | Sense- | | |
| 12 | B- | COS- | COS- | STSP- | |
| 13 | N- | N- | DATA- | | DATA- |
| 14 | N+ | N+ | DATA+ | | DATA+ |
| 15 | GND | GND | GND | GND | GND |

Max. start/stop time is 1.6ms (over 4.15m).

**Note on F12:**

+5V (Pin 4) is measured and controlled directly at the end of the line via Sense - and Sense +.

Maximum cable length: 100 m

**Caution!** Pin 4 and Pin 5 must under no circumstances be connected!

### 3.2.10.1 Connections of the encoder interface

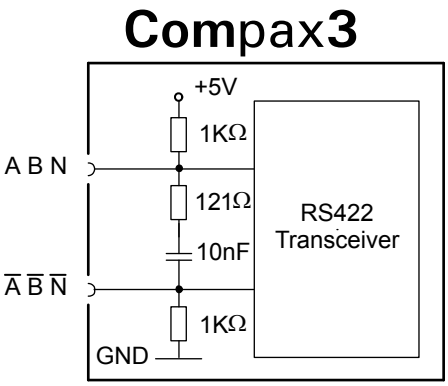


The input connection is available in triple (for A & /A, B & /B, N & /N)

## 3.2.11. Mounting and dimensions

**Mounting:**

- 3 socket head screws M5 or
- by direct snapping on a 35 mm supporting rail (according to DIN EN 50 022), Mounting material: DIN rail clip and distance piece available as accessories - Set ZBH02/04

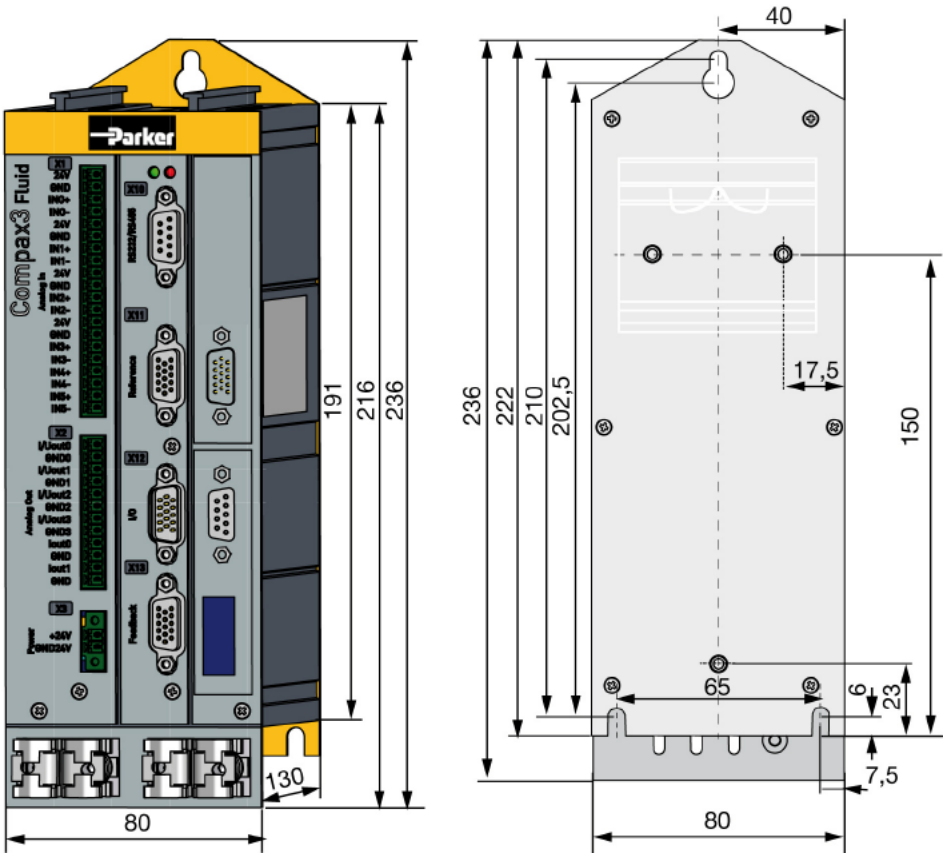


Stated in mm

# 4. Technical Characteristics

### Voltage supply 24VDC

| Controller type | Compax3 F001 D2 |
|---|---|
| Voltage range | 21 - 27VDC |
| Mains module | with switch-on current limitation, due to capacitive load |
| Fuse | MTP miniature circuit breaker or "delayed action fuse", due to capacitive load |
| Current drain of the device | 0.8A (max. 1.5A) |
| Total current drain | 0.8A + total load of the digital outputs |
| Ripple | <1Vss |
| Requirement according to safe extra low voltage (SELV) | yes |

### Size / weight

| Controller type | Compax3 F001 D2 |
|---|---|
| Dimensions: HxWxD [mm] | 199x80x130 |
| Weight [kg] | 2.0 |
| Housing / protection class | Enclosed metal housing, insulation according to EN60529 / IP 20 |

### Inputs and outputs

| Controller type | Compax3 F001 D2 |
|---|---|
| 8 control inputs | 24VDC / 10kOhm |
| 4 control outputs | Active HIGH/short-circuit protected, 24V / 100mA |
| 4 analog current inputs | 14Bit |
| 2 analog voltage inputs | 14Bit |
| 4 analog outputs | 16bits, current or voltage |
| 2 analog monitor outputs | 8bits |

### COM ports

| | |
|---|---|
| RS232 | ◆ 115200 baud<br>◆ Word length: 8 bits, 1 start bit, 1 stop bit<br>◆ Hardware handshake XON, XOFF |
| RS485 (2 or 4-wire) | ◆ 9600, 19200, 38400, 57600 or 115200 baud<br>◆ Word length 7/8 bit, 1 start bit, 1 stop bit<br>◆ Parity (can be switched off) even/odd<br>◆ 2 or 4-wire |

### Supported valves and feedback systems

| | |
|---|---|
| Valves | ◆ D1*FH series |
| Absolute encoder | ◆ Analog 0..20mA, 4..20mA, ±10V<br>◆ Start/Stop - interface<br>◆ SSI interface<br>◆ EnDat 2.1-interface<br>◆ 1VSS (max. 400kHz) Interface, 13.5bits / graduation of the scale<br>◆ RS422 Encoder (max. 5MHz, (track A or B) internal resolution quadrature |

## EMC limit values

| | |
|---|---|
| **EMC interference emission** | Limit values according to EN 61000-6-4: 2001 for the industrial environment |
| **EMC disturbance immunity** | Limit values according to EN 61000-6-2: 2001 for the industrial environment |

## Environmental requirements Compax3F

| | | |
|---|---|---|
| **General ambient conditions** | In accordance with **EN 60 721-3-1 to 3-3**<br>Climate (temperature/humidity/barometric pressure): Class 3K3 | |
| **Permissible ambient temperature:** | | |
| Operation<br>storage<br>transport | 0 to +45 °C class 3K3<br>–25 to +70 °C class 2K3<br>–25 to +70 °C class 2K3 | |
| **Tolerated humidity:** | no condensation | |
| Operation<br>storage<br>transport | <= 85% class 3K3<br><= 95% class 2K3<br><= 95% class 2K3 | (Relative humidity) |
| **Elevation of operating site** | <=1000m above sea level for 100% load ratings<br><=2000m above sea level for 1% / 100m power reduction<br>please inquire for greater elevations | |
| **Mechanic resonances:** | EN 60068-2-6 (sinusoidal excitation) | |
| **Sealing** | Protection type IP20 in accordance with EN 60 529 | |

## Insulation requirements

| | |
|---|---|
| **Degree of contamination** | Level of contamination 2 according to EN 50 178 |

## UL certification

| | |
|---|---|
| **Conform to UL:** | ◆ USL according to UL508 (Listed)<br>◆ CNL according to C22.2 No. 142-M1987. (Listed) |
| **Certified** | ◆ E-File_No.: E198563 |

The UL certification is documented by a “UL” logo on the device (type specification plate).

“UL” logo: c UL US LISTED IND. CONT. EQ. 36MC

**Detailed information on the technical data of the Compax3F devices can be found in the Help-files of the individual Compax3F device types.**

# 5. Index


## A

Analog / Encoder (plug X11) • 20
Analog Input (plug X1) • 16
Analog Output (plug X2) • 17

## C

C3 ServoManager • 4
Compax3F device description • 13
Conditions of utilization for CE-conform operation • 11
Connection between PC and Compax3 • 4
Connection of the digital Outputs/Inputs • 21
Connections of the encoder interface • 20, 22

## D

Device assignment Compax3 Fluid • 6
Digital inputs/outputs • 21
Digital inputs/outputs (plug X12) • 21

## E

EC declaration of conformity Compax3F • 12

## F

Feedback (connector X13) • 22

## G

General hazards • 9

## I

Introduction • 6

## L

Level • 21

## M

Meaning of the front panel LEDs (via X10) • 13
Mounting and dimensions • 23

## N

Notes on the Documents Supplied • 3

## P

Packaging, transport, storage • 8
Plug and connector assignment • 14
Plug and connector assignment Compax3 Fluid • 13
Plug and connector assignment complete • 15
Plug assignment Compax3S0xx V2 • 19

## R

RS232 plug assignment • 19
RS232/RS485 interface (plug X10) • 19
RS485 plug assignment • 19

## S

Safety instructions • 9
Safety-conscious working • 9
Scope of delivery • 6
Special safety instructions • 9
State of delivery • 13

## T

Technical Characteristics • 24
Type specification plate Compax3 Fluid • 7

## U

Usage in accordance with intended purpose • 9
USB - RS232 converter • 19

## V

Voltage supply (plug X3) • 18

## W

Warranty conditions • 10
Wiring of analog outputs • 17
Wiring of the analog inputs • 16

## X

X10 • 19
X12 • 21